PN007A

Pressure sensor with display

PN-001-RBR14-MFPKG/US/3D /V

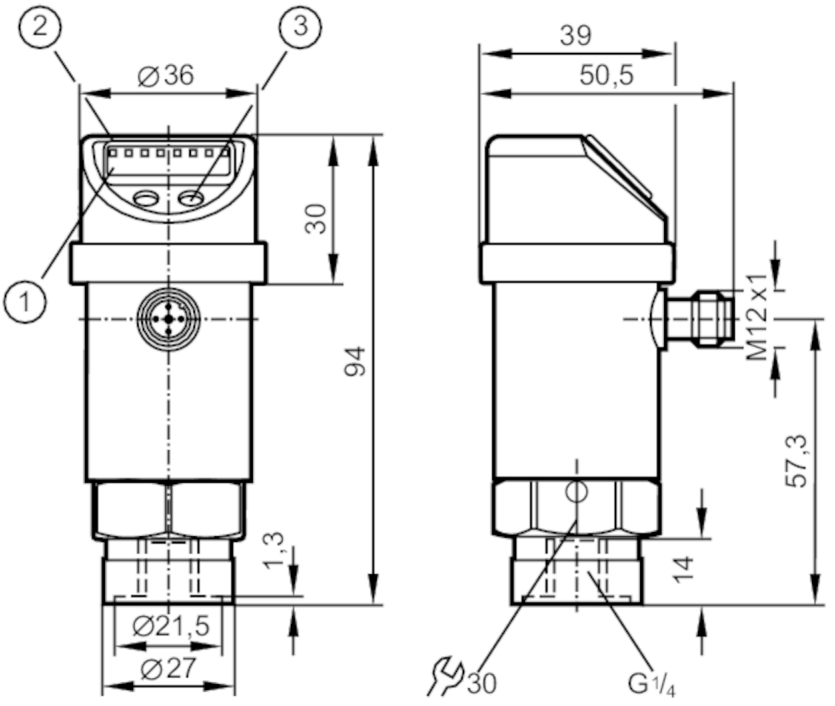

1 alphanumeric display 4-digit
2 LEDs Display unit / Switching status
3 Programming button

Product characteristics			
Number of inputs and outputs		Number of digital outputs: 1; Number of analog outputs: 1	
Measuring range		0...1 bar	0...1000 mbar
Process connection		threaded connection G 1/4 Internal thread	
Application			
System		gold-plated contacts	
Application		for industrial applications	
Media		liquids and gases	
Medium temperature	[°C]	-20...60	
Min. bursting pressure		30000 mbar	3 MPa
Pressure rating		10000 mbar	1 MPa
Type of pressure		relative pressure	
Electrical data			
Operating voltage	[V]	18...36 DC; (to SELV/PELV)	
Current consumption	[mA]	< 50	
Protection class		III	
Reverse polarity protection		yes	
Overvoltage protection		yes; (< 40 V)	
Power-on delay time	[s]	0.3	
Integrated watchdog		yes	

PN007A

Pressure sensor with display

PN-001-RBR14-MFPKG/US/3D /V

Inputs / outputs			
Number of inputs and outputs		Number of digital outputs: 1; Number of analog outputs: 1	
Outputs			
Total number of outputs		2	
Output signal		switching signal; analog signal; (configurable)	
Electrical design		PNP	
Number of digital outputs		1	
Output function		normally open / closed; (configurable)	
Max. voltage drop switching output DC	[V]	2	
Permanent current rating of switching output DC	[mA]	250	
Switching frequency DC	[Hz]	< 170	
Number of analog outputs		1	
Analog current output	[mA]	4...20	
Max. load	[Ω]	500	
Analog voltage output	[V]	0...10	
Min. load resistance	[Ω]	2000	
Short-circuit protection		yes	
Type of short-circuit protection		yes (non-latching)	
Measuring/setting range			
Measuring range		0...1 bar	0...1000 mbar
Set point SP	[mbar]	10...1000	
Reset point rP	[mbar]	5...995	
In steps of	[mbar]	5	
Factory setting		SP1 = 250 mbar	rP1 = 230 mbar
Accuracy / deviations			
Switch point accuracy	[% of the span]	< ± 0,5	
Repeatability	[% of the span]	< ± 0,1; (with temperature fluctuations < 10 K)	
Characteristics deviation	[% of the span]	< ± 0,25 (BFSL) / < ± 0,5 (LS); (BFSL = Best Fit Straight Line; LS = limit value setting)	
Hysteresis deviation	[% of the span]	< ± 0,25	
Long-term stability	[% of the span]	< ± 0,05; (per 6 months)	
Temperature coefficient zero point	[% of the span / 10 K]	0,2; (0...60 °C)	
Temperature coefficient span	[% of the span / 10 K]	0,2; (0...60 °C)	
Reaction times			
Delay time programmable dS, dr	[s]	0; 0,2...50	
Max. response time analog output	[ms]	3	

PN007A

Pressure sensor with display

PN-001-RBR14-MFPKG/US/3D /V

Software / programming			
Parameter setting options		hysteresis / window; normally open / closed; switch-on/ switch-off delay; Damping; Display unit; current/voltage output	
Operating conditions			
Ambient temperature	[°C]	-20...60	
Storage temperature	[°C]	-40...100	
Protection		IP 65	
Tests / approvals			
ATEX marking		II 3D Ex tc IIIC T80°C Dc X	
EMC		EN 61000-4-2 ESD	4 kV CD / 8 kV AD
		EN 61000-4-3 HF radiated	10 V/m
		EN 61000-4-4 Burst	2 kV
		EN 61000-4-5 Surge	0,5/1 kV
		EN 61000-4-6 HF conducted	10 V
Shock resistance		DIN IEC 68-2-27	50 g (11 ms)
Vibration resistance		DIN IEC 68-2-6	20 g (10...2000 Hz)
MTTF	[years]	213	
Pressure equipment directive		sound engineering practice; can be used for group 2 fluids; group 1 fluids on request	
Mechanical data			
Weight	[g]	302.5	
Housing		tubular	
Dimensions	[mm]	Ø 36 / L = 94	
Material		stainless steel (1.4301 / 304); stainless steel (1.4404 / 316L); PC; PBT; PEI; FKM; PTFE	
Materials (wetted parts)		stainless steel (1.4305 / 303); ceramics; FKM	
Min. pressure cycles		100 million	
Process connection		threaded connection G 1/4 Internal thread	
Restrictor element integrated		no (can be retrofitted)	
Displays / operating elements			
Display		Display unit	4 x LED, green
		Switching status	LED, yellow
		Function display	alphanumeric display, 4-digit
		Measured values	alphanumeric display, 4-digit
Display unit		mbar; kPa; psi; inHg	
Remarks			
Pack quantity		1 pcs.	

Electrical connection

Connector: 1 x M12; coding: A; Contacts: gold-plated

PN007A

Pressure sensor with display

PN-001-RBR14-MFPKG/US/3D /V
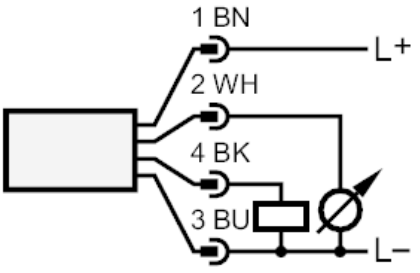
Connection