REM-190SA0S-IOL32B-H1141
Absolute Rotary Encoder - Multiturn – IO-Link Industrial Line

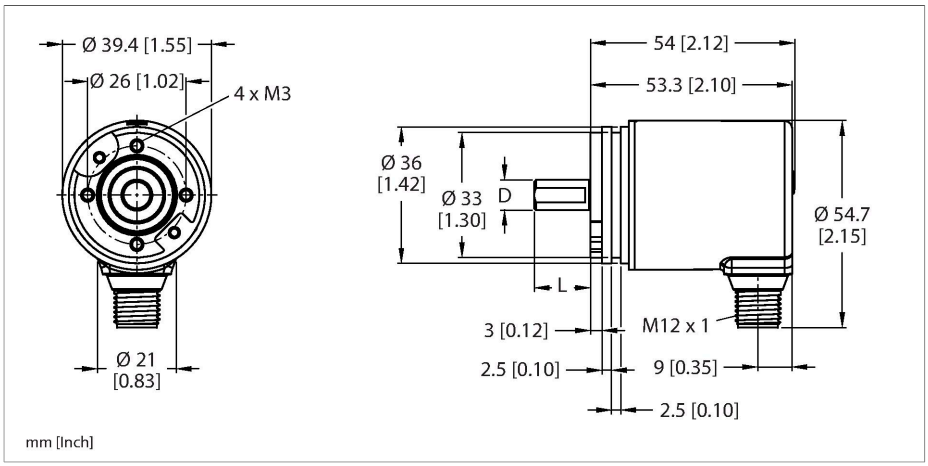

Features

- Synchro flange, Ø 36 mm
- Solid shaft, Ø 6.35 mm × 12.5 mm
- Magnetic measuring principle
- Shaft material: stainless steel
- Protection class IP67 on housing and shaft side
- -40…+85 °C
- Max. 4000 rpm (continuous operation 2000 rpm)
- Energy harvesting technology
- 18…30 VDC
- M12 × 1 male connector, 4-pin
- Singleturn resolution 14 bit scalable, default 14 bit
- Multiturn resolution scalable only to 18 bits over total resolution, default 18 bits
- Total resolution 32 bit scalable, default 32 bit

Technical data

Type	REM-190SA0S-IOL32B-H1141
ID	100018242
Measuring principle	Magnetic
General data	
Max. Rotational Speed	4000 rpm
Starting torque	< 0.01 Nm
Repetition accuracy	± 0.2 °
Absolute accuracy	± 0.5 °
Output type	Absolute multiturn
Electrical data	
Operating voltage U_B	18…30 VDC
No-load current	≤ 40 mA
Short-circuit protection	yes
Wire break/reverse polarity protection	yes
Communication protocol	IO-Link
IO-Link	
IO-Link specification	V 1.1
Programming	FDT/DTM
Mechanical data	
Flange type	Synchro flange
Flange diameter	Ø 36 mm
Shaft Type	Solid shaft
Shaft diameter D (mm)	6.35
Shaft Length L [mm]	12.5
	Shaft with surface
Shaft material	Stainless steel

Wiring diagram

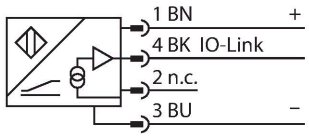

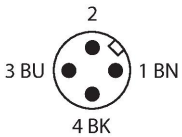

REM-190SA0S-IOL32B-H1141| 13-11-2024 14-46 | Technical modifications reserved

Technical data

Housing material	Die-cast zinc
Electrical connection	Connector, M12 × 1
Axial shaft load	20 N
Radial shaft load	40 N
Environmental conditions	
Ambient temperature	-40…+85 °C
Vibration resistance (EN 60068-2-6)	300 m/s², 10…2000 Hz
Shock resistance (EN 60068-2-27)	2500 m/s², 6 ms
Protection class	IP67
Protection class shaft	IP67
MTTF	25 years

REM-190SA0S-IOL32B-H1141| 13-11-2024 14-46 | Technical modifications reserved