BI1-EG05-AN6X-V1331
Inductive Sensor

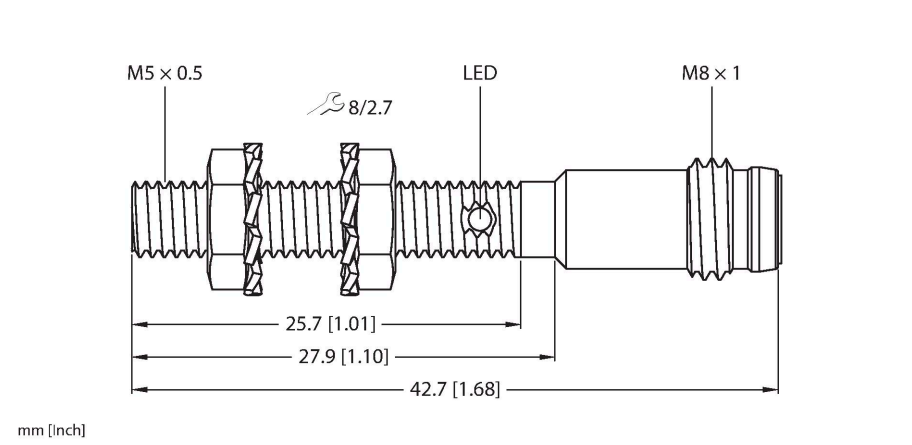

Features

- Threaded barrel, M5 × 0.5
- Stainless steel, 1.4305 (AIS303)
- DC 3-wire, 10…30 VDC
- NO contact, NPN output
- M8 x 1 male connector

Wiring diagram

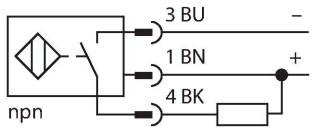

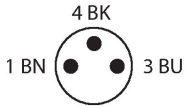

Technical data

Type	BI1-EG05-AN6X-V1331
ID	4608740
General data	
Rated switching distance	1 mm
Mounting conditions	Flush
Secured operating distance	≤ (0.81 × Sn) mm
Correction factors	St37 = 1; Al = 0.3; stainless steel = 0.7; Ms = 0.4
Repeat accuracy	≤ 2 % of full scale
Hysteresis	10 %
Electrical data	
Operating voltage U_B	10…30 VDC
Ripple U_{ss}	≤ 10 % U_{Bmax}
DC rated operating current I_e	≤ 100 mA
No-load current	≤ 15 mA
Residual current	≤ 0.1 mA
Isolation test voltage	0.5 kV
Short-circuit protection	yes/Cyclic
Voltage drop at I_e	≤ 1.8 V
Wire break/reverse polarity protection	yes/Complete
Output function	3-wire, NO contact, NPN
Switching frequency	3 kHz
Mechanical data	
Design	Threaded barrel, M5 x 0.5
Dimensions	42.7 mm
Housing material	Stainless steel, 1.4305 (AISI 303)
Active area material	Plastic, PA6.6

Functional principle

Inductive sensors detect metal objects contactless and wear-free. For this, they use a high-frequency electromagnetic AC field that interacts with the target. Inductive sensors generate this field via an RLC circuit with a ferrite coil.

BI1-EG05-AN6X-V1331| 13-11-2024 13-56 | Technical modifications reserved

Technical data

Max. tightening torque of housing nut	2.5 Nm
Electrical connection	Connector, M8 × 1
Environmental conditions	
Ambient temperature	-25…+70 °C
Vibration resistance	55 Hz (1 mm)
Shock resistance	30 g (11 ms)
Protection class	IP67
MTTF	2283 years acc. to SN 29500 (Ed. 99) 40 °C
Switching state	LED, Yellow

Mounting instructions

Mounting instructions/Description

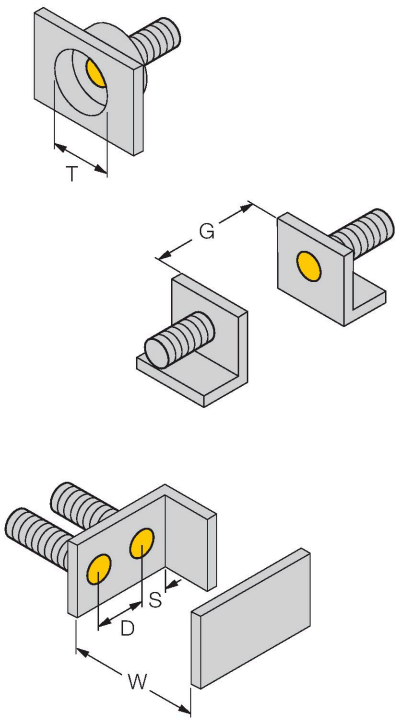

Distance D	3 × B
Distance W	3 x Sn
Distance T	3 x B
Distance S	1.5 x B
Distance G	6 x Sn
Diameter active area B	Ø 5 mm

Accessories

Dimension drawing	Type	ID	
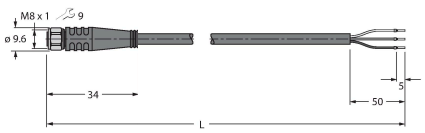	PKGV3M-2/TEL	6625385	Connection cable, M8 female connector, straight, 3-pin, stainless steel coupling nut, cable length: 2 m, jacket material: PVC, black; cULus approval

BI1-EG05-AN6X-V1331| 13-11-2024 13-56 | Technical modifications reserved