Accessories
Dairy Screw Connection Process Adapters For NCLS Capacitive Limit Level Sensors NCLS-DF50

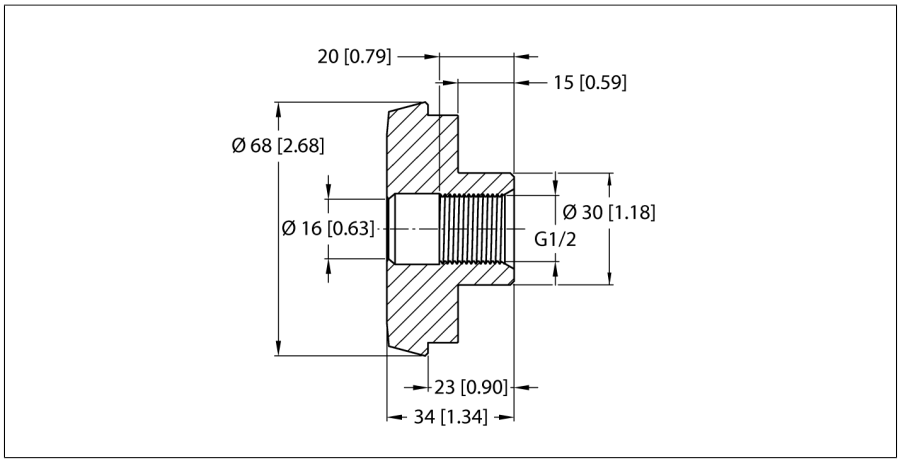

Type	NCLS-DF50
ID	100004435

Mounting location	any
Pressure resistance	10 bar
Medium temperature	0…+140 °C
CIP/SIP-capable	yes

Tests/approvals	
Warning	Protect against mechanical damage

Mechanical data	
Design	Accessories for threaded barrel
Dimensions	34 x 68 x 68 mm
Housing material	Stainless steel, 1.4404 (AISI 316L)
Materials (contact with media)	Stainless steel 1.4404 (AISI 316L)
Max. tightening torque of housing nut	10 Nm
Process connection	Dairy screw connection
Protection class	IP67
	When installed

- Screw-in adapter for pipes
- Dairy screw connection G1/2”, DN50
- Standardized according to DIN 11851
- Suitable for NCLS limit level sensors
- The dairy pipe process adapters are particularly suitable for use in hygienic environments such as the pharmaceutical or food industry (especially dairies).

Functional principle

The screw-in concept for limit level sensors from the NCLS series enables standardized positioning of the sensor at defined points in a system, such as a flow channel or tank.

The dairy screw connection fastens to the corresponding counterpart on the tank or pipe. The sensor is then screwed directly into the adapter. The sealing is provided without the use of any O-rings on the sensor head, but by direct pressing of metal onto PEEK.

The terminal adapters are available in all standard industrial shapes and sizes. The system consisting of the sensor and process adapter can therefore be adjusted easily to to the different application requirements.

Edition • 2023-11-01T00:08:56+01:00